DRAWING CHANGES					
REV	CHANGE NOTICE	DATE	REVISION DESCRIPTION / REASON	APPROVED BY	DRAWN
		00/00/00	NEW DRAWING ISSUED		GPP

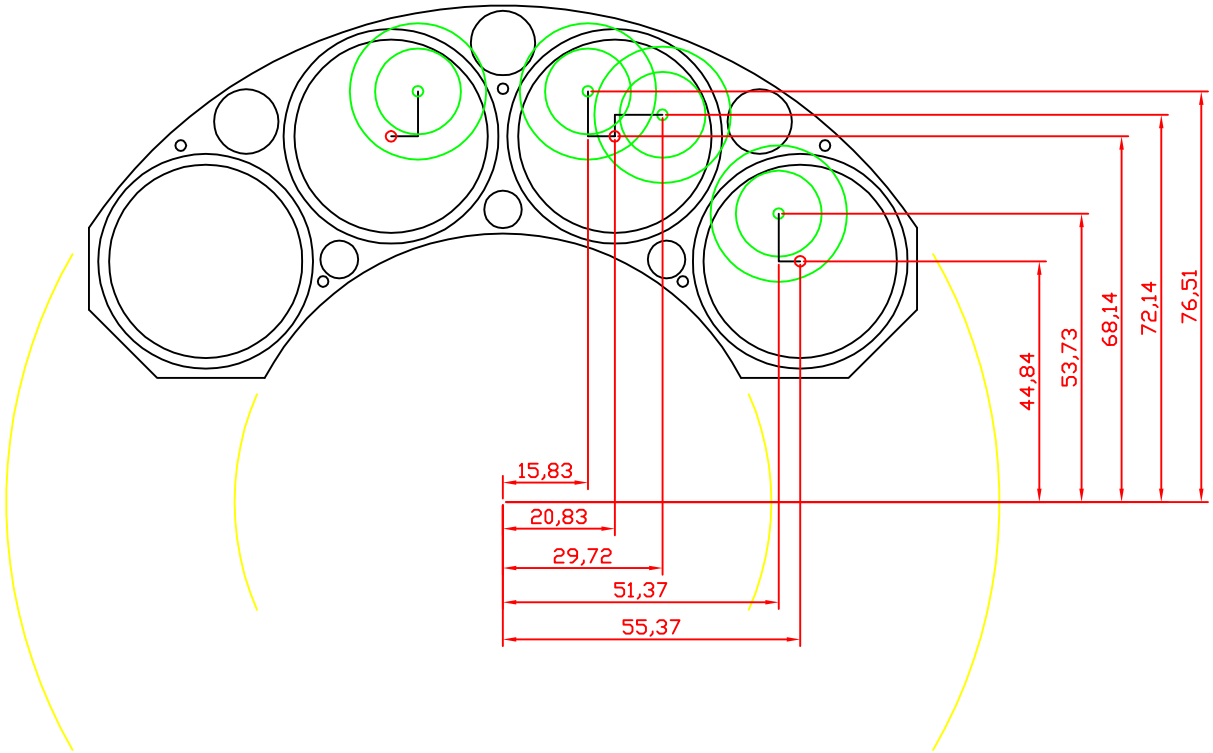

QTY	UNITS	PART NUMBER	DESCRIPTION	MATERIAL SPECIFICATION	ITEM

PARTS LIST

POTTER/SIMONS

Email potters.engineering@hunterlink.net.au

RELATED DRAWINGS

RELATED DATA

PROTECTIVE TREATMENT
–

WELDING
–

MARK PART No. IN REGION MARKED

Third Angle Projection
AS 1100

UNLESS OTHERWISE SPECIFIED		DESIGNED	G.POTTER	01/05/08
CONCENTRICITY WITHIN	0.05	DRAWN	G.POTTER	01/05/08
SYMMETRY WITHIN	0.10	DWG CHK		
PERPENDICULARITY	0.10	ENG CHK		
BREAK SHARP EDGES	0.15 MIN	PROJECT		
CORNER FILLET RADIUS	0.16 MAX	SCALE	0:0 DO NOT SCALE FROM DRAWING	
ANGLES WITHIN	0.5 DEG	ALL DIMENSIONS IN MILLIMETERS U.N.O.		
MACHINED SURFACE FINISH	125 AA			

TITLE

VARIABLE FUEL ARM TANK

Aircraft

Drawing Number 000

Sheet 4 of 12

Rev. 1

Cad File Name -00/001